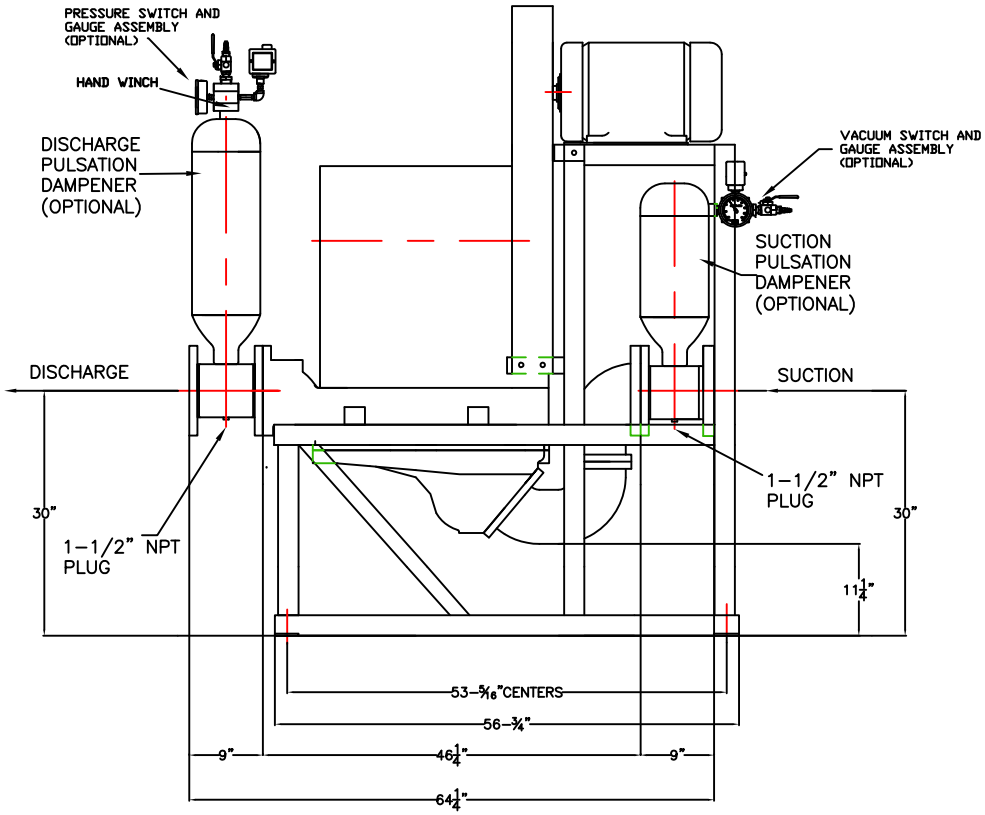

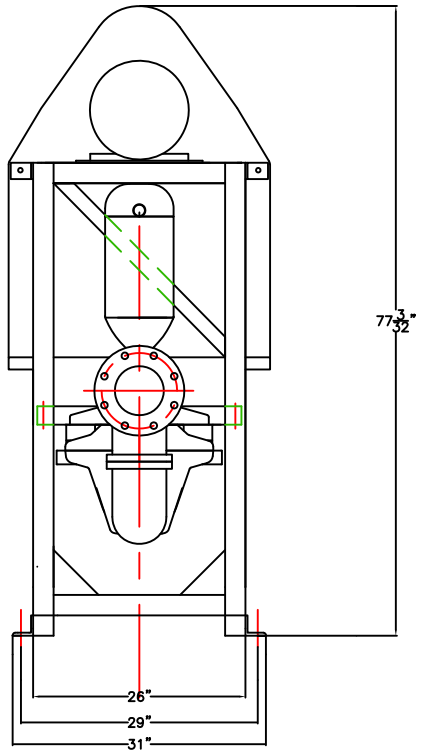

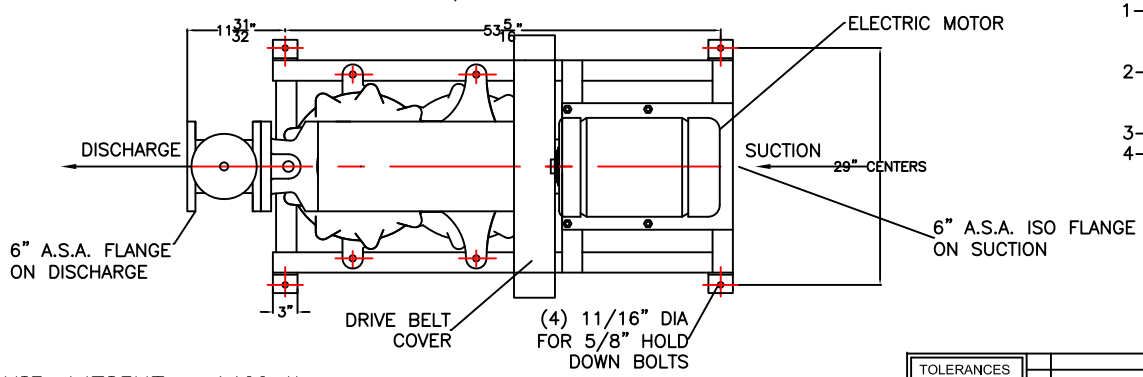

NOTES:

1- HEIGHTS SHOWN ARE PVP STANDARDS PUMP CENTERLINE HEIGHTS CAN BE RAISED OR LOWERED.
2- SWITCHES AND DAMPENERS ARE OPTIONAL. CHECK BUILD SHEETS FOR EQUIPMENT SUPPLIED.
3- FLEX JOINTS NOT RECOMMENDED
4- WHEN INSTALLING PUMP KEEP AREA UNDER PUMP CLEAR FOR MAINTENANCE

TOTAL EQUIP. WEIGHT = 1400 lbs
WT. W/O DAMPENERS = 1180 LBS

TOLERANCES	
FRACT.	±0.25
DEC.	±0.25
ANG.	±5°

REV	DESCRIPTION	DATE	BY
	REVISION HISTORY		

THIS DRAWING AND ALL INFORMATION IS THE PROPERTY OF

PENN VALLEY PUMP CO., INC.
998 EASTON ROAD - WARRINGTON, PA 18976
PHONE: (215) 343-8750 FAX: (215) 343-8753

ALL INFORMATION CONTAINED IN THIS DOCUMENT IS BOTH CONFIDENTIAL AND PROPRIETARY TO PVP. NO LICENSE, EXPRESSED OR IMPLIED, UNDER ANY PATENT, COPYRIGHT, OR TRADE SECRET IS GRANTED OR IMPLIED BY THE CONVEYANCE OF THIS DOCUMENT. NO PART OF THIS DOCUMENT MAY BE REPRODUCED, TRANSMITTED, TRANSCRIBED, STORED IN A RETRIEVAL SYSTEM, TRANSLATED TO ANY LANGUAGE OR COMPUTER LANGUAGE, IN ANY FORM BY ANY MEANS ELECTRONIC, MECHANICAL, OR OTHERWISE.

CUSTOMER:
LOCATION:

PROJECT: 6" DOUBLE DISC PIGGY BACK UNIT WITH 6" PULSATION DAMPENERS

SCALE	1/24"=1"
DATE	1/18/07
DR. BY	
PLOT DATE	
DRAWING NO.	PVD 728
SHEET	1 OF 1
REV.	C